SP-7A

SPECIFICATIONS:

CONCRETE: 5,000 P.S.I. @ 28 DAYS.
ENTRAINED AIR: 5% – 8%.
STEEL: A.S.T.M. A496–A615 GRADE 60–80 KSI. EPOXY COATED (IF REQ'D).
DESIGN LOADING: ACI 318–99 TRAFFIC. USE ACI LOAD FACTORS. A.A.S.H.T.O. METHOD OF DESIGN. EQUIVALENT SOIL PRESSURE OF 40 (PCF).

LIVE LOAD: H20.
EARTH FILL: 0 TO 3'
WATER TABLE: 3' BELOW GRADE.

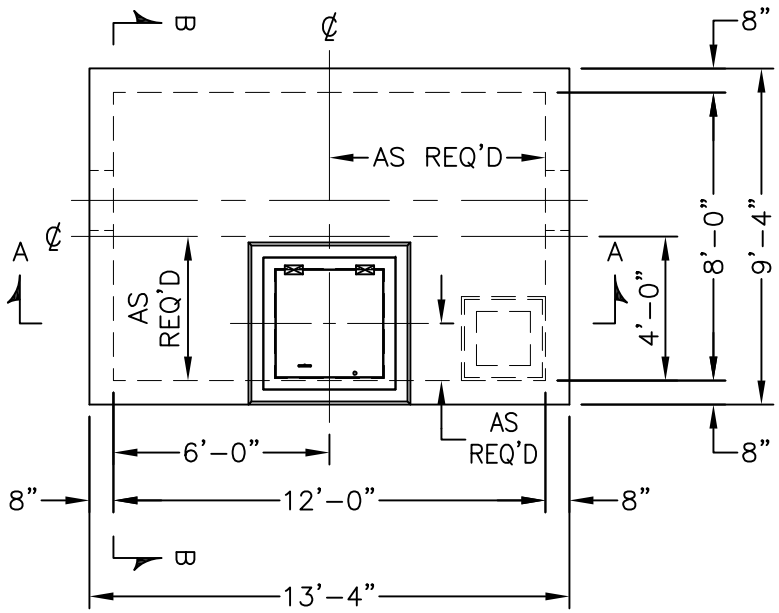

PLAN VIEW

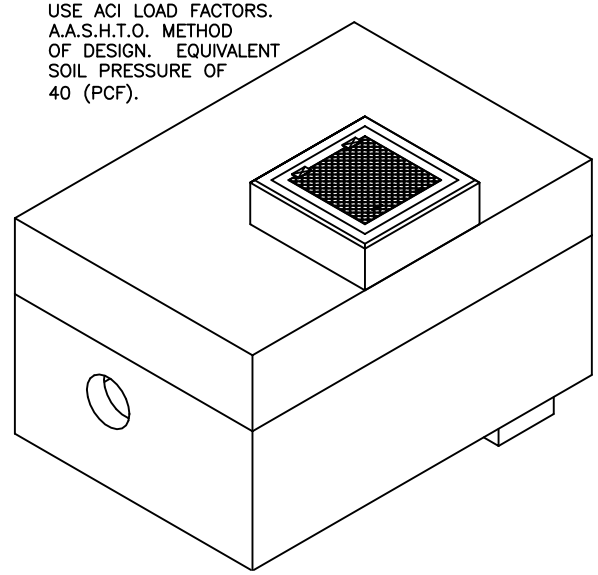

ISO VIEW

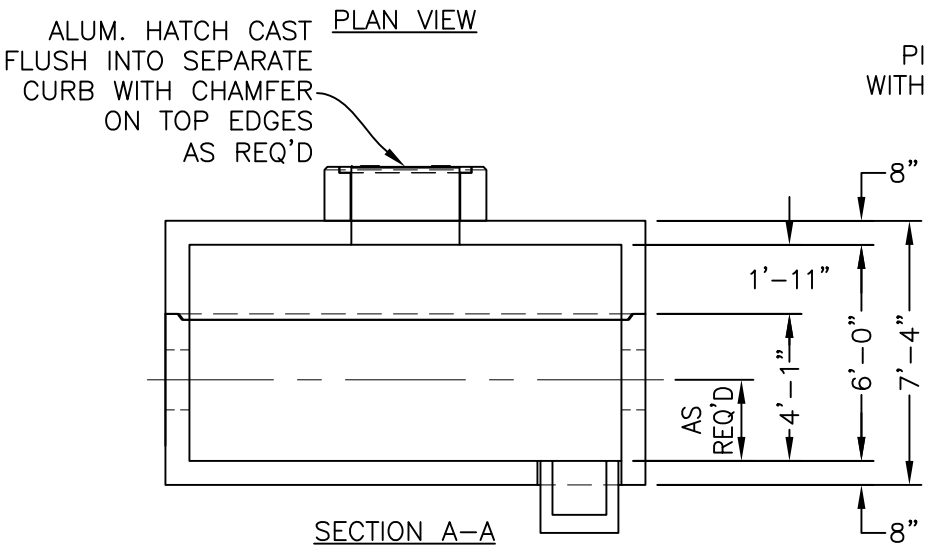

SECTION A–A

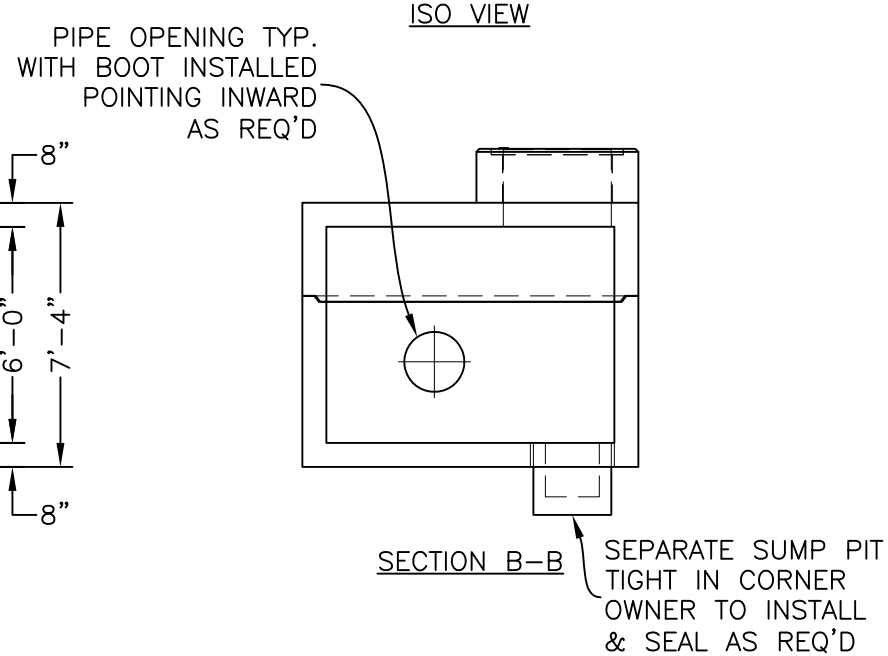

SECTION B–B

KISTNER CONCRETE PRODUCTS INC.
8713 READ ROAD
E. PEMBROKE, N.Y.
14056
(716) 894–2267

PRODUCT DESIGNATION

8'-0" X 12'-0" PRV VAULT

DWG. NO.

8X12PRVVCAT ©

12/7/15

O:\Drawings\0New Stuff after 2-26-10\PRODUCTS\Structures\Catalog Drawings\8X12PRVVCAT.dwg